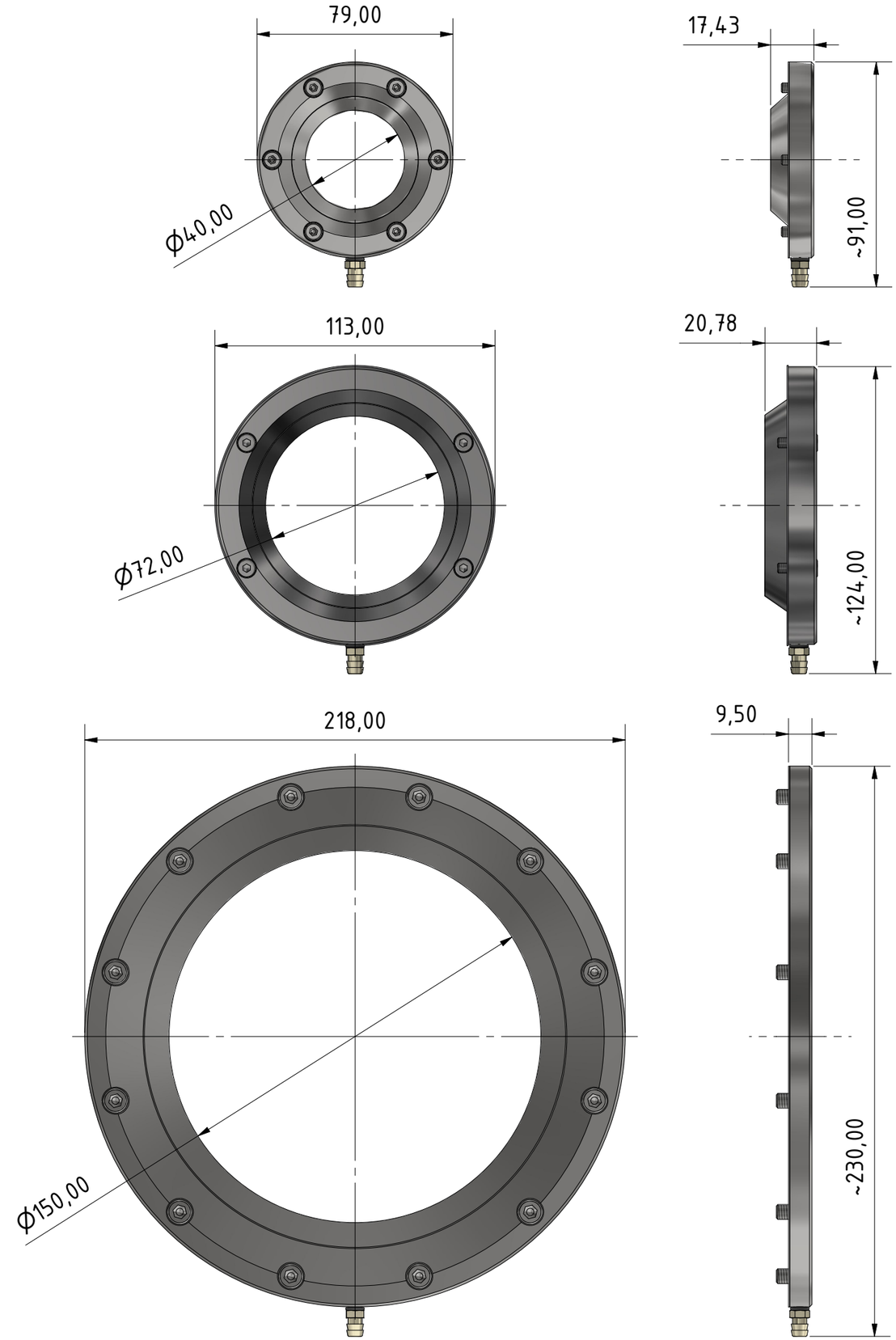

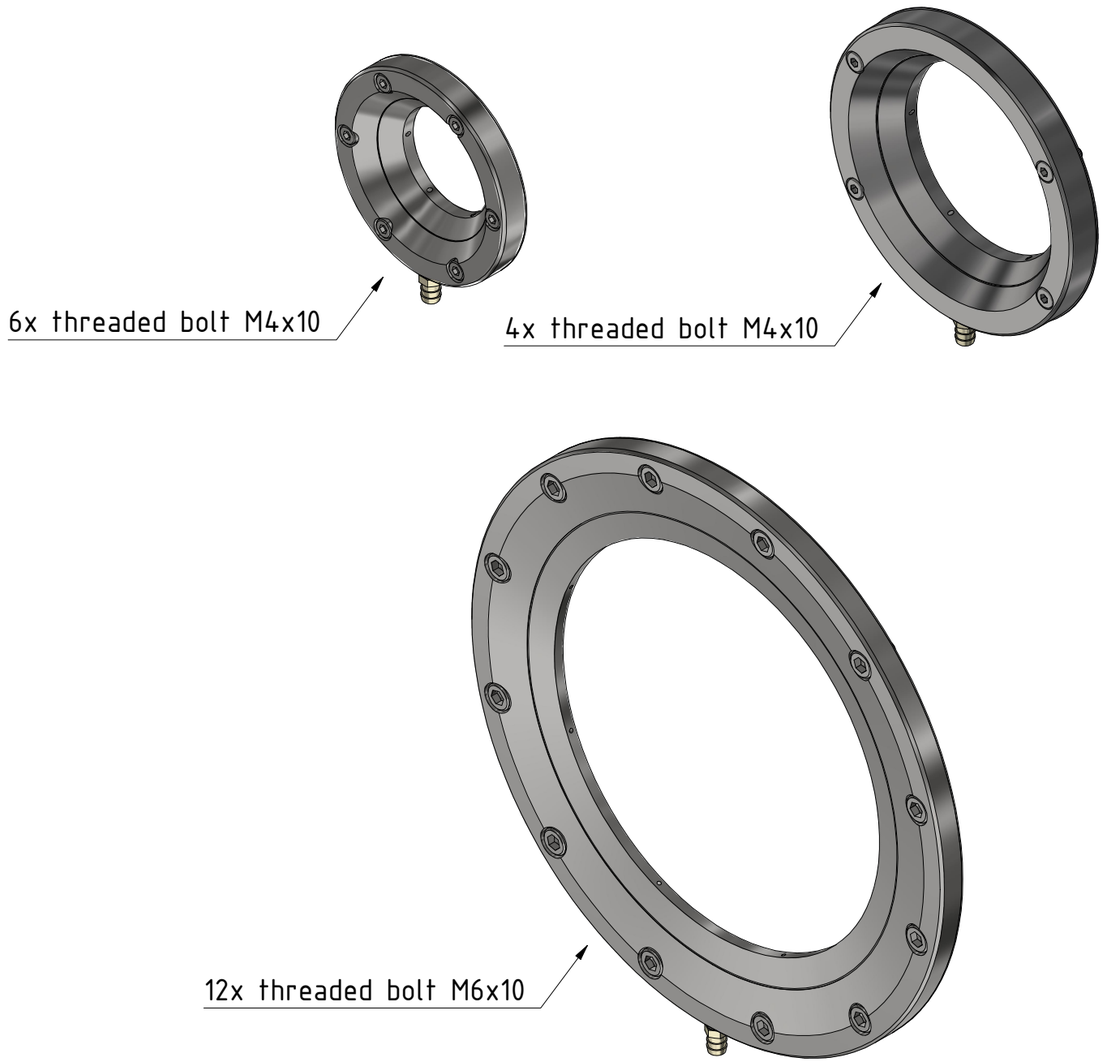

Dimensions in mm!

(Application) IECEx (T0x) Technical drawing for mechanical components suppliers/manufacturers	(all. Deviation) Tolerance class f according to ISO 2768-1 Tolerance class H according to ISO 2768-2	(Surface) Roughness: Ra = 2,0 µm (≤ 6,3 µm) (ISO 468) (DIN EN 60079-1 2004: paragraph 5.2.2)	Scale: 1 : 2 — Mass: *various* Material: Stainless steel (1.4404), Polytetrafluoroethylene, brass (nickel coated), rubber Materialnumber:

	Date	Name
Drawn	Dec13, 2021	S.Weber
Checked		
Standard	ISO 286	

SAMCON Prozessleittechnik GmbH

(Component)

water.Blade

VA1.x - VA2.x - VA4.x.BOR1

(Drawing number)

Doc.-ID: 211213-ET95water.Blade-SW-2D-CAD_rev.00.idw

1

A3

Status	Changes	Date	Name